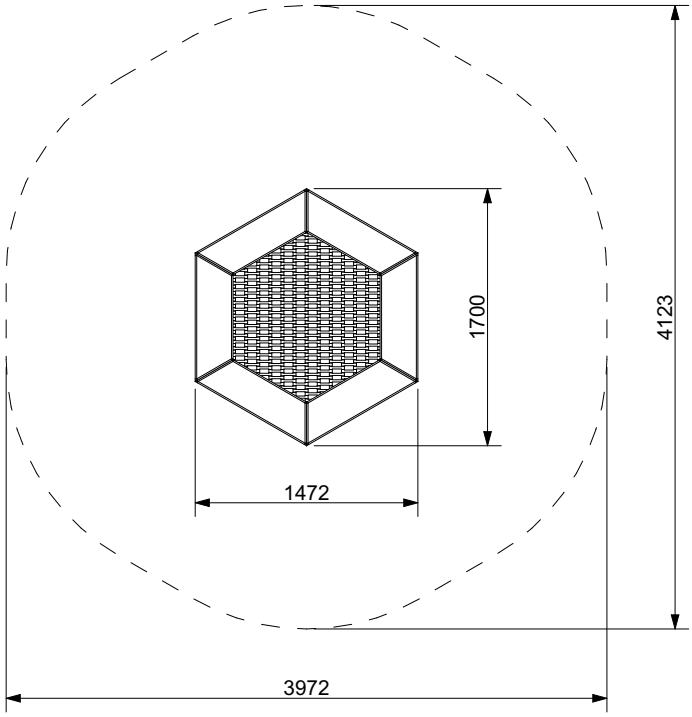

SCALE

1:50