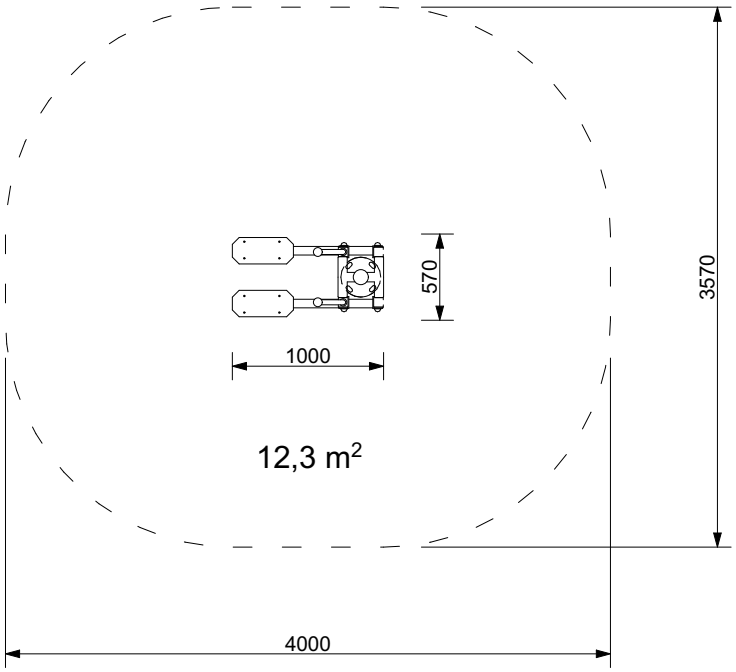

SCALE
1:50